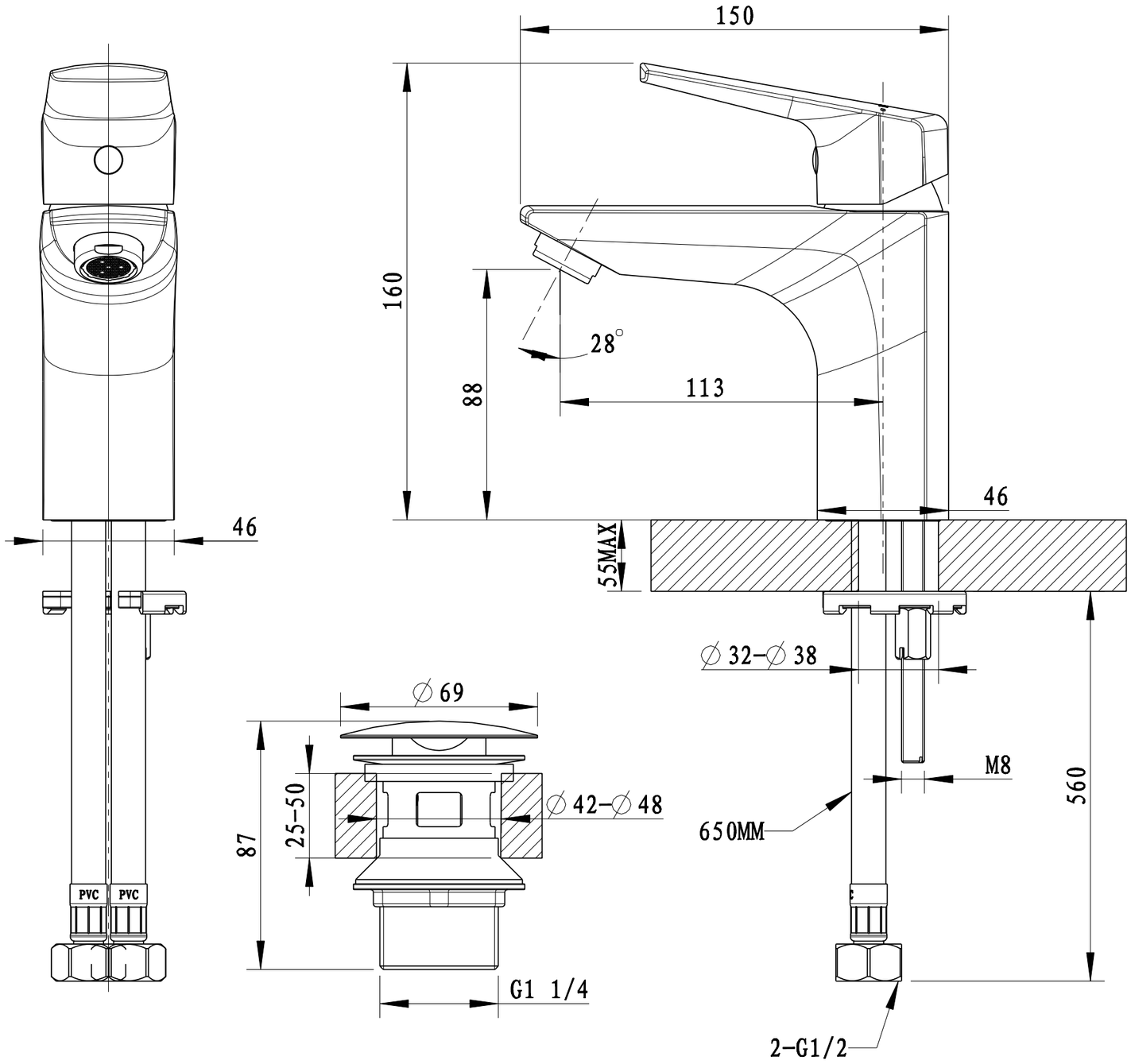
150
160
88
28°
113
46
55MAX
46
PVC
PVC
∅ 32-∅ 38
∅ 69
M8
560
25-50
∅ 42-∅ 48
87
650MM
G1 1/4
2-G1/2